0500_3821	D	Pro/ENGINEER	METRIC DWG

REL NO	LTR	NO	REVISION	ZONE	DR	CHKR	APPROVED	DATE
FRD16606	A	1	PRODUCTION_RELEASE	-	WP	WP	EK	05-06-03
FRD33816	B	1	CHG HEATER AMPERAGE TABLE, SEE ECO	-	GJT	BG	NAVARRETE	09-24-07

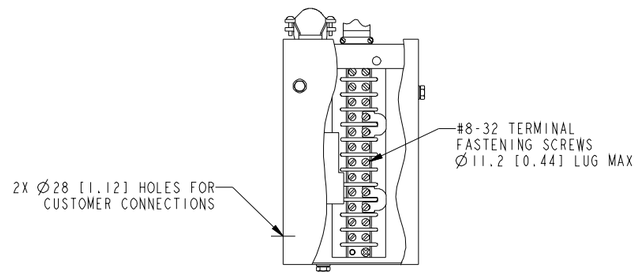

DETAIL OF HETER
TERMINAL BOX

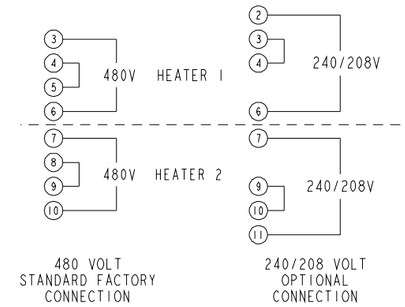

JUMPER CONNECTION DETAIL

NOTES:

1. DIMENSIONS IN [ ] ARE INCHES.
2. THE HEATER CONTROL RELAY DRAWS 83mA OF CURRENT WHEN THE HEATERS ARE UNPOWERED. HEATERS ARE NOT POWERED WHEN:
   1) THE ENGINE HAS REACHED DESIGN TEMPERATURE OR
   2) THE ENGINE IS RUNNING.

⚠ A BATTERY CHARGER IS REQUIRED TO PREVENT BATTERY DISCHARGE.

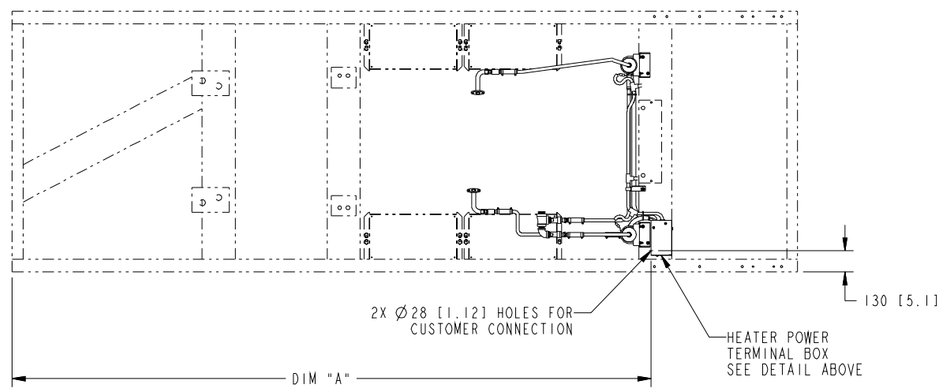

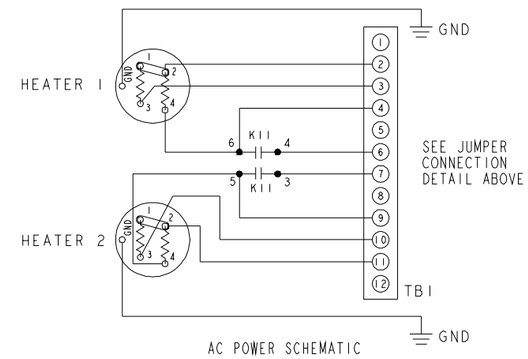

AC POWER SCHEMATIC

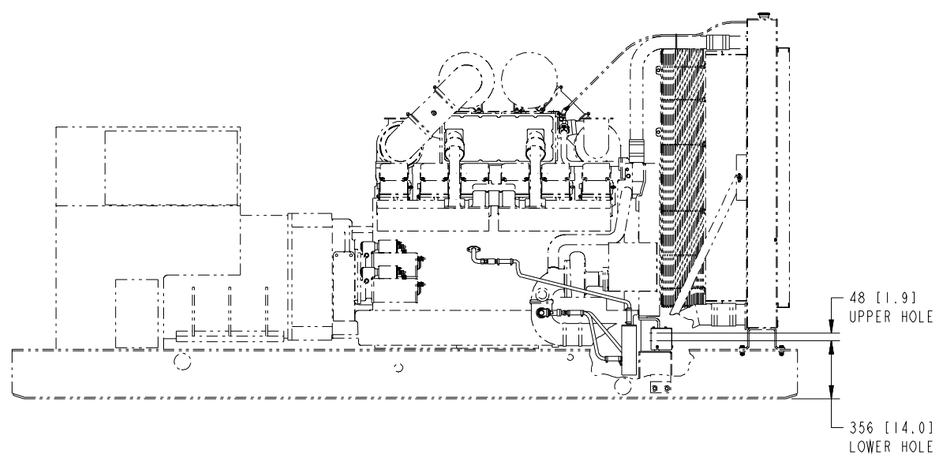

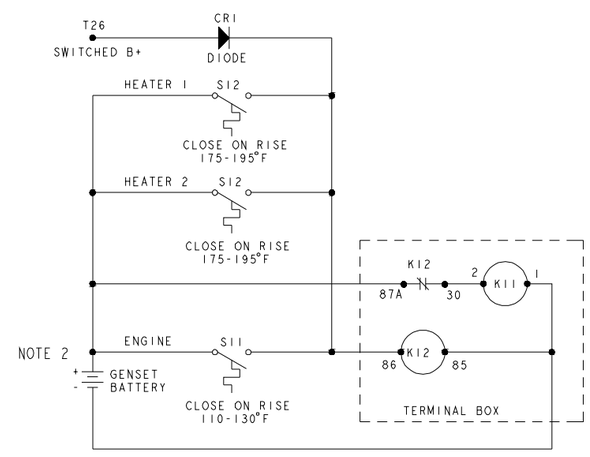

DC CONTROL SCHEMATIC

HEATER AMPERAGE TABLE

SINGLE PHASE HEATER VOLTAGE	FEATURE CODE H556 TWO HEATERS			FEATURE CODE H557 TWO HEATERS		
	HEATER AMPS	TOTAL AMPS	TOTAL WATTS	HEATER AMPS	TOTAL AMPS	TOTAL WATTS
208	18.0	36.0	7485	23.1	46.3	9630
240	20.8	41.6	9980	26.8	53.5	12840
480	10.4	20.8	9980	13.4	26.8	12840

TABULATION

GENSET ENGINE/MODEL	DIM "A"
KTA 38 DFJA, JB, JC, JD	3927 [154.6]
KTA 50 DFLM, LC, LD, MB	4475 [176.2]

DO NOT SCALE PRINT

ANG TOL± 1.0°

DRAWN TO SCALE OF 1/1

TOLERANCE UNLESS OTHERWISE SPECIFIED

DIM	mm	inch
	X ± 1	.X ±
	.X ± 0.8	.XX ±
	.XX ± 0.38	.XXX ±

HOLE		
0.00-4.99	+0.13/-0.08	.004-.200 / +.006/-.003
5.00-9.99	+0.20/-0.10	.201-.421 / +.008/-.004
10.00-17.49	+0.25/-0.13	.422-.703 / +.010/-.005
17.50-24.99	+0.30/-0.13	.704-.999 / +.012/-.005

SW# 0500-3104

COPIED FROM -

THIRD ANGLE PROJECTION

THIS DOCUMENT IS THE PROPERTY OF CUMMINS POWER GENERATION. IT CONTAINS PROPRIETARY AND CONFIDENTIAL INFORMATION WHICH MUST NOT BE DUPLICATED, USED OR DISCLOSED OTHER THAN EXPRESSLY AUTHORIZED BY CUMMINS POWER GENERATION OR ITS REPRESENTATIVE

ITEM	PART NO	DWG SIZE	DESCRIPTION OR MATERIAL	REF DES

	NAME	DATE
DR	W_PELTIER	05-06-03
CHKR ☒ MFG ☐	W PELTIER	05-06-03
APPROVED	E KROHNFELDT	05-06-03

FOR INTERPRETATION OF DIMENSIONING AND TOLERANCING, SEE ANSI Y14.5M-1982

MODEL FIRST USED ON: DFJ, DFL

SITE CODE: PGA

CUMMINS POWER GENERATION
1400 73RD AVE NE
MINNEAPOLIS, MINNESOTA 55432

TITLE: INTERFACE_OUTLINE (HEATER)

DWG NO: 0500_3821 | SHEET 1 of 1 | DWG SIZE D